B-1308 (4)

IDEC

INSTRUCTION SHEET

LF1B-N LED Illumination Unit
(24V DC Type)

Confirm that the delivered product is what you have ordered. Read this instruction sheet to make sure of correct operation. Make sure that the instruction sheet is kept by the end user.

Safety Precautions

In this operation instruction sheet, safety precautions are categorized in order of importance to Warning and Caution :

⚠ WARNING

Warning notices are used to emphasize that improper operation may cause severe personal injury or death.

⚠ CAUTION

Caution notices are used where inattention might cause personal injury or damage to equipment.

⚠ WARNING

- Before designing the final equipment and powering up the LF1B-N illumination unit, confirm the specifications described on this sheet. If there is any uncertainty in the description, contact IDEC before powering up the LF1B-N illumination unit.
- Do not disassemble, repair, or modify the LF1B-N illumination unit, otherwise severe accidents may result, such as electric shocks, damage, fire, or malfunction.
- Turn off the power to the LF1B-N illumination unit before wiring. Make sure of correct wiring, otherwise electric shocks or damage may result.
- Do not gaze into the LF1B-N illumination unit while it is lit, and do not project the light to other people, otherwise eyes may be injured.
- Do not pull out or push in the cable of the LF1B-N illumination unit, otherwise damage may result. Give a slack to the cable while wiring.
- The LF1B-N illumination unit is a general-purpose and industrial electronic device. Do not use the LF1B-N illumination unit for electronic equipment which may damage a human body or threaten a life in case a malfunction or failure occurs.
- Make sure that the cable does not touch the LF1B-N housing.

⚠ CAUTION

- LED modules and illumination units may vary in illumination colors and illuminance.
- Apply a voltage within the rated value, otherwise the LED elements may be damaged.
- The LF1B-N illumination unit is vulnerable to static electricity. Take a sufficient measure for protection against static electricity and surge voltages.
- Do not apply an excessive force to the LF1B-N illumination unit. Do not leave a damaged LF1B-N illumination unit unattended or use a damaged LF1B-N.
- Make sure of the correct operating temperature, which is the temperature around the LF1B-N illumination unit. Otherwise internal temperature rise may result in damage.
- Do not use or store the LF1B-N illumination unit in a place subjected to vibrations and shocks, otherwise damage may result.
- The LF1B-N illumination unit is intended for use indoor location. Do not use the LF1B-N illumination unit in the following places:
  Exposed to direct sunlight, near heaters, and at high temperatures
  Subjected to iron powder, oil, chemicals, and corrosive gases
  Basements, greenhouses, and other humid places
  Cold storage warehouses and cooler exhaust outlets
  (Make sure that no freezing or condensation occurs)
- Do not loosen the screws of product, otherwise the protection characteristics will be impaired.
- To clean the cover, use a soft cloth with water or neutral detergent. Do not use solvents such as thinner, benzene, or alkaline, otherwise discoloration, deterioration, or decrease in strength may occur.
- The edge of the cable sheath is not waterproof construction. Water may invade the LF1B-N illumination unit in the capillary action when water splashes directly to the edge of the cable sheath. Do not splash water directly.

1 Type

LF1B - NA 3 P - 2 THWW2 - 1M

Product Dimensions
A : 134mm
B : 210mm
C : 330mm
D : 580mm
E : 830mm
F : 1080mm

Cover
3 : Clear Cover
4 : White Cover

Degree of Protectipn
P : IP65

Rated Voltage
2 : 24V DC

LED Illumination Color
THWW2 : White
TLWW2 : Incandescent
SHR2 : Red
SHY2 : Yellow
SHG2 : Green
THS2 : Blue

Cable Length
1M : 1m
3M : 3m

2 Specifications

· General Specifications

Applicable Standard		UL2108, UL8750, CSA C22.2 No. 250.0 *1 EN55015, FCC Part 15 Subpart B / Class B, EN61547					
Type		LF1B-NA※	LF1B-NB※	LF1B-NC※	LF1B-ND※	LF1B-NE※	LF1B-NF※
Rated Voltage		24V DC (Opereting voltage range:21.6V to 26.4V DC)					
Input Current (at the rated voltage)		Illumination Color : White, Incandescent, Blue					
	typ.	60mA	120mA	180mA	360mA	540mA	720mA
	max.	70mA	140mA	210mA	420mA	625mA	830mA
		Illumination Color : Red, Yellow, Green					
	typ.	40mA	80mA	120mA	240mA	360mA	480mA
	max.	46mA	95mA	140mA	280mA	420mA	560mA
Power Consumption (at the rated voltage)		Illumination Color : White, Incandescent, Blue					
	typ.	1.5W	2.9W	4.4W	8.7W	13.0W	17.3W
	max.	1.7W	3.4W	5.1W	10.1W	15.0W	20.0W
		Illumination Color : Red, Yellow, Green					
	typ.	1.0W	2.0W	2.9W	5.8W	8.7W	11.6W
	max.	1.2W	2.3W	3.4W	6.8W	10.1W	13.5W
Operating Temperature		-30 to +55 ºC (no freezing)					
Operating/Storage Humidity		45 to 85% RH (no condensation)					
Storage Temperature		-35 to +70 ºC (no freezing)					
Life Expectancy *2		40,000 hours (until the brightness reduces to 70% the initial value in 25ºC and 45% RH environment)					
Insulation Voltage		100M minimum (500V DC megger)					
Dielectric Strength		1000V AC, 1 minute (between live and dead metal parts)					
Vibration Resistance (damage limits)		5 to 55Hz amplitude 0.5 mm				5 to 55Hz amplitude 0.17 mm	
Shock Resistance (damage limits)		1000m/s²				300m/s²	
Weight(approx.)		95g	125 g	165 g	255 g	430 g	740 g
Degree of Protection *3		IP65					

*1 Please connect to Class 2 Power Unit when you use the LF1B-N Illumination as UL / c-UL Listed Low -voltage Luminaire.
*2 LED life depends on the operating environment and conditions.
*3 IP67 is tested to IEC 60529 , IP67F is tested to JIS C 0920 , IP69K is tested to DIN 40050-9. Do not assure protection against all actual operating conditions.

3 FCC Part15 Subpart B / Class B

This device complies with part 15 of the FCC Rules. Operation is subject to the following two conditions: (1) This device may not cause harmful interference, and (2) this device must accept any interference received, including interference that may cause undesired operation.

This equipment has been tested and found to comply with the limits for a Class B digital device, pursuant to part 15 of the FCC Rules. These limits are designed to provide reasonable protection against harmful interference in a residential installation. This equipment generates, uses and can radiate radio frequency energy and, if not installed and used in accordance with the instructions, may cause harmful interference to radio communications. However, there is no guarantee that interference will not occur in a particular installation. If this equipment does cause harmful interference to radio or television reception, which can be determined by turning the equipment off and on, the user is encouraged to try to correct the interference by one or more of the following measures:

- Reorient or relocate the receiving antenna.
- Increase the separation between the equipment and receiver.
- Connect the equipment into an outlet on a circuit different from that to which the receiver is connected.
- Consult the dealer or an experienced radio/TV technician for help.

4 Dimensions

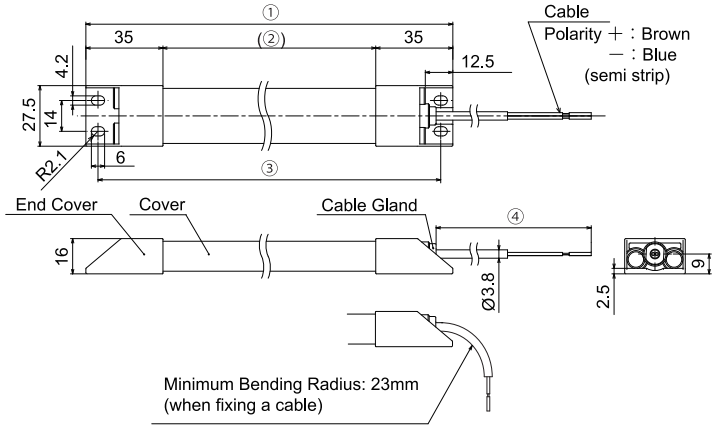

· Dimensions (mm)

Type	①	②	③
LF1B-NA※	134	64	123
LF1B-NB※	210	140	199
LF1B-NC※	330	260	319
LF1B-ND※	580	510	569
LF1B-NE※	830	760	819
LF1B-NF※	1080	1010	1069

Type	④
LF1B-N□△P-2※-1M	1000
LF1B-N□△P-2※-3M	3000

5 Installation

· Mounting

The LF1B-N illumination unit has two mounting holes each on both ends. Mount the illumination unit using at least two M4 mounting screws, one on each end.
· Recommended tightening torque :1.0 to 1.3N·m

Note:Mounting screws are not supplied with the indicator and must be provided by the user. Choose the screws taking the end cover thickness of (2.5 mm) into consideration.
Note:Use spring washer(M4) and plain washer (M4) if necessary in order to prevent the screws from loosening. (Recommend)

· Wiring

The LF1B-N illumination unit is equipped with a cabtyre cable, AWG24 x 2 cores. When wiring, use an appropriate connector, terminal, or wire to meet the specification values.
When soldering the wires of the cable, use a 20W soldering iron, with a tip temperature of 350ºC, and complete soldering within 3 seconds. Sn-Ag-Cu type is recommended when using lead-free solder.

6 Precautions for Disposal

· Dispose of the LF1B-N LED Illumination Unit as an industrial waste.

IDEC CORPORATION
https://www.idec.com
Manufacturer : IDEC CORP.
2-6-64 Nishimiyahara Yodogawa-ku, Osaka, 532-0004, Japan
EU Authorized Representative : APEM SAS
55, Avenue Edouard Herriot BP1, 82303 Caussade Cedex, France
UK Authorized Representative: APEM COMPONENTS LIMITED
Drakes Drive, Long Crendon, Buckinghamshire, HP18 9BA, England.

2021.05